OMNIMATE Power Through-Panel Terminals

OMNIMATE – "PUSH IN" PGK 4 through-panel terminal

Comfortable, cost-saving installation and connection of conductors up to 4 mm²

In your applications space is limited. Save space and time for your housing feedthrough with our flexible connection system. Let's connect.

You are looking for a space-saving solution to quickly install wire connections for your device with panel or housing feed-throughs.

You'll find what you are looking for with our innovative "PUSH IN" connectivity technology solutions. Our PGK 4 feed-through terminal is worthy of note for its tool-free wire connection on the interior and exterior of your device. Thanks to its flexible, sliced construction and the intuitive fastening mechanism, it's easy for you to build blocks with plenty of poles.

With such features, our PGK 4 is currently the most compact and fastest solution for housing feedthroughs. Let's connect.

Flexible application options
Due to its construction with only 5.1 mm wide slices, you can build simple, space-saving terminal blocks with plenty of poles.

Clear marking
The terminals can be clearly labelled on the top and bottom, so that the terminal block can always be marked regardless of mounting position.

Simple handling and reduced assembly costs
Enjoy the benefits of the intuitive fastening mechanism and the ability to fasten the terminal block in the housing cut-out in seconds.

Secure attachment through thick and thin
The innovative terminal block fixing mechanism ensures a safe and reliable hold for the device feedthrough and is suited to panel thicknesses between 1.50 mm and 3.00 mm.

Solid contact with a large connection cross-section
Our innovative "PUSH IN" connection technology allows users to quickly and conveniently connect conductors. It also meets the need for permanent and vibration-resistant contacts. Conductor connections with a cross-section of up to 4.0 mm² with ferrules are possible.

Available for testing at any time
You can perform a simple function check at any time using the easily accessible diagnostic test points.

Future-proofed materials and approvals
Halogen-free materials and additional international approvals increase the application options for new device designs.

Direct connected
"PUSH IN" the quick, tool-free, intuitive connection mechanism for prepared wires.
www.push-in.com

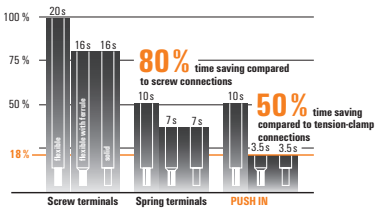

Through-Panel Terminals
WGK – OMNIMATE Power

The universal solution to feed power through housing walls. Suitable for applications such as EMC filters, discretely structured converters for drive engineering, encapsulated equipment or inverters in the production of renewable energy.
Choose from the flexible range:

- Wide performance spectrum for currents up to 232 A and wire cross sections from 4 to 95 mm² (AWG 4/0)
- Various types of connections: castable solder connection, cable-lug-stud connection, and maintenance-free clamping-yoke screw connection
- Shapes for accommodating horizontal or vertical wire outlets

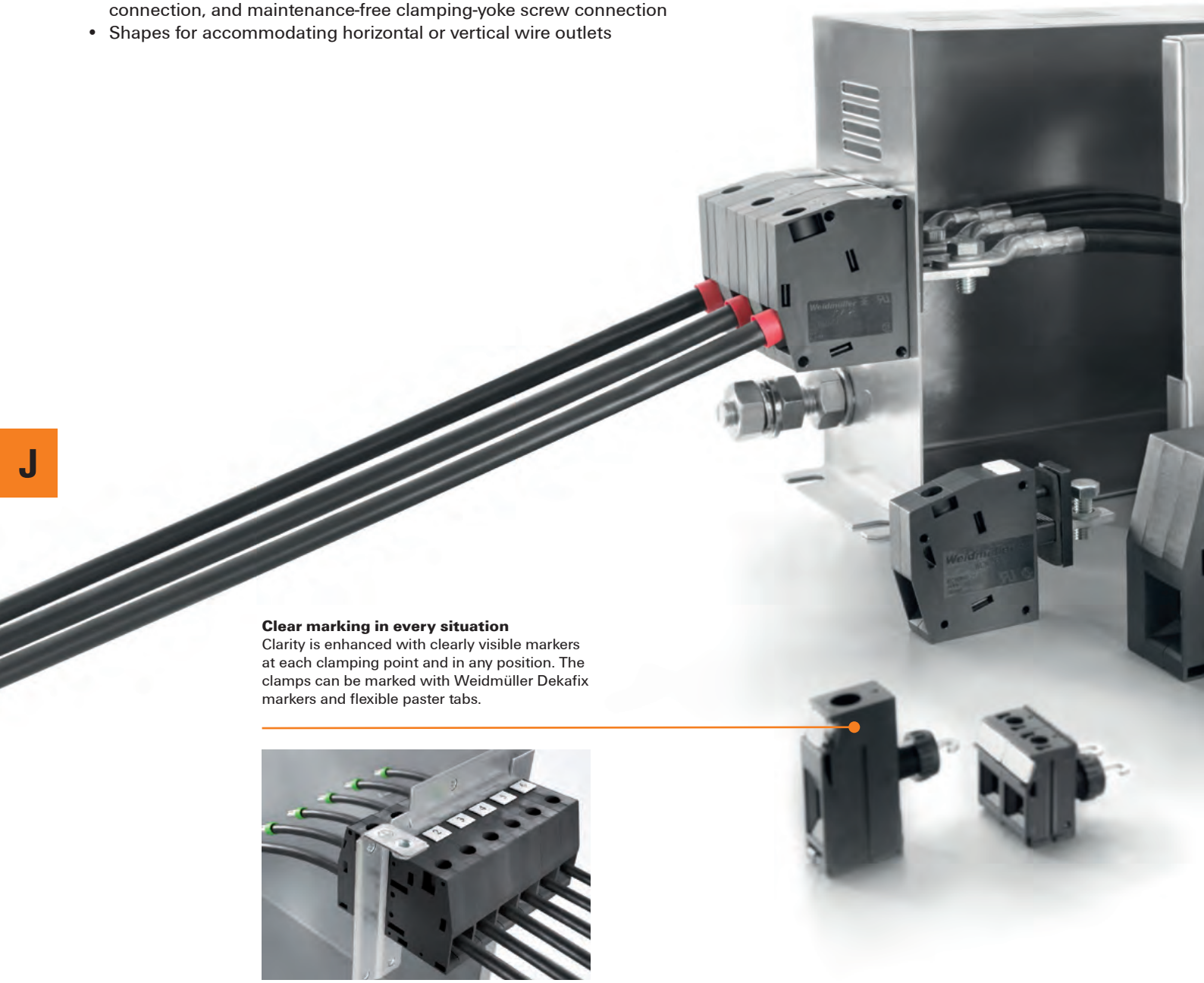

Clear marking in every situation
Clarity is enhanced with clearly visible markers at each clamping point and in any position. The clamps can be marked with Weidmüller Dekafix markers and flexible paster tabs.

Safety with extra power
The high-performance insulating material WEMID meets maximum system availability requirements: With an RTI (relative temperature index) of 120 °C, the OMNIMATE power Through-Panel Terminals exceed the highest continued use temperature of standard PA (100 °C) at +20° K, thus creating more power reserves and maximum safety with temperature fluctuations and overloads

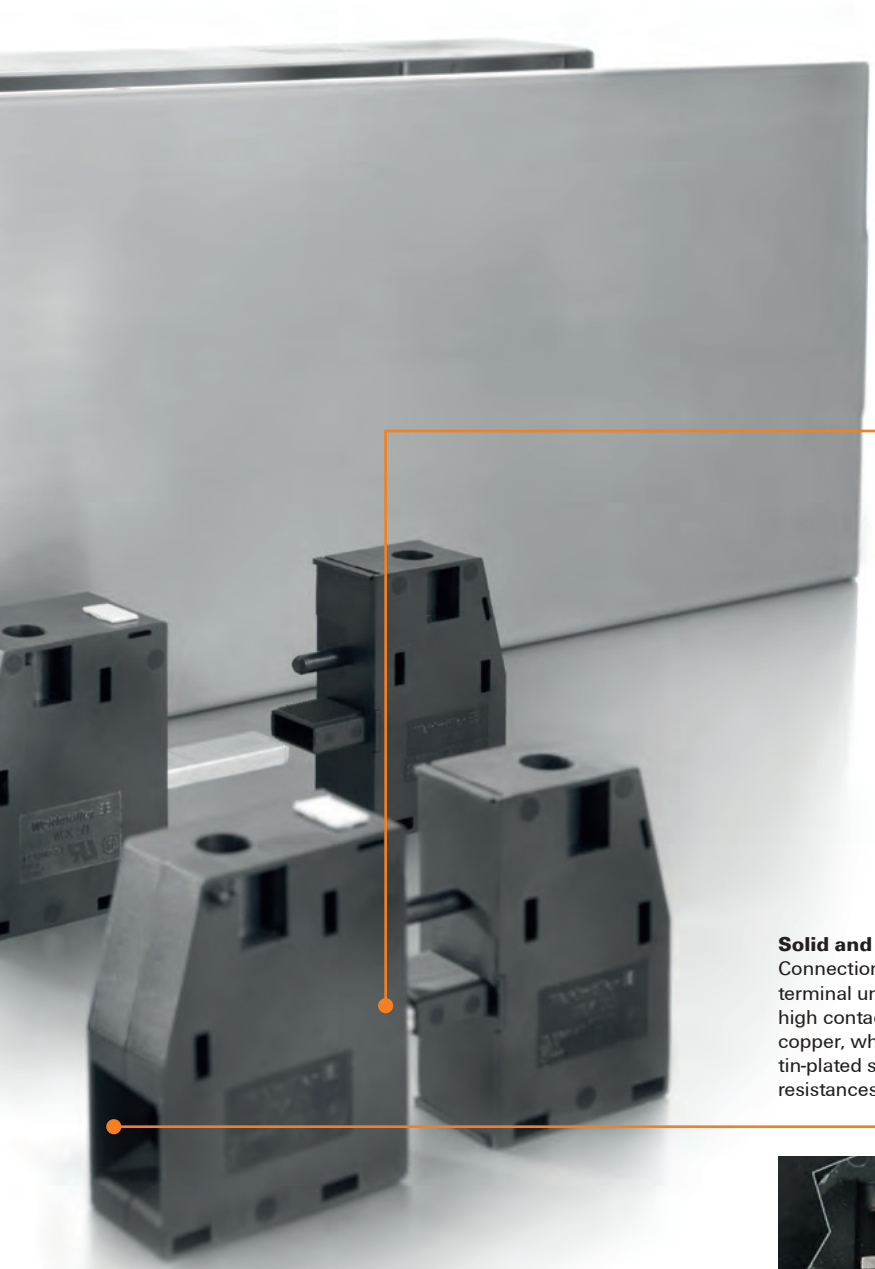

Easy handling
WGK series lead-through terminals consist of an inside and outside component that are easily locked with one another through the housing wall without any tools.

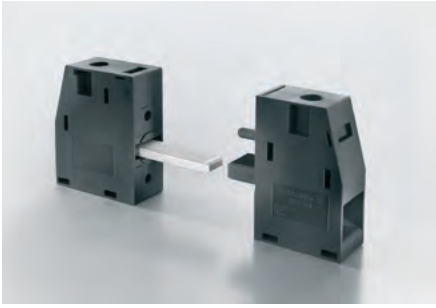

Solid and proven connection
Connections proven a million times. The terminal unit consists of hardened steel, for very high contact force. The current bar is made of copper, which gives a low voltage drop. The tin-plated surface ensures minimum contact resistances.

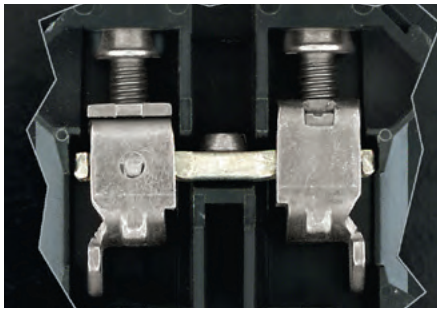

WGK series – System overview

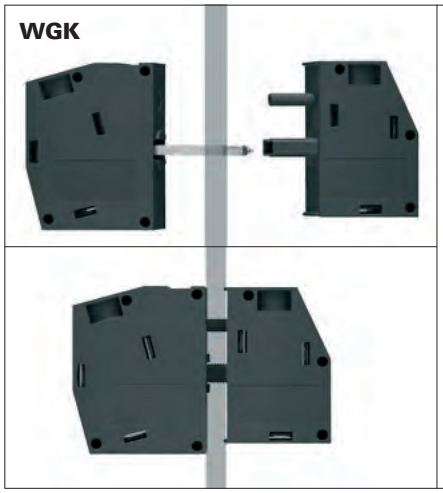

Easy installation

WGK series feedthrough terminals consist of an inside and outside component that are easily locked with one another through the housing wall without any tools.

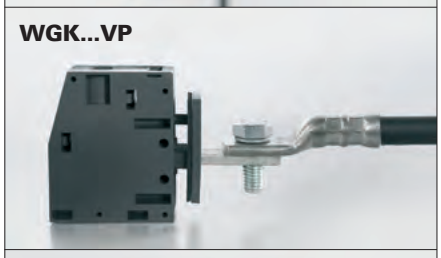

Maximum freedom of design

Different types of connection on the inside such as a castable soldering connection (VWGK...), cable lug bolt connection (WGK ...VP) and a no-service clamping yoke-screw connection (WGK...) provide the optimum connection in any installation situation.

Weidmüller offers two models with a horizontal (WGK) and vertical (WGKV) outgoing direction to adapt the conductor guide to the given installation conditions.

The VP and VWGK models of the WGK lead-through terminals with an insulating housing and clamping yoke connection on the outside are enhanced for use in encapsulated and cast equipment (such as EMV filters).

These products are developed for 100 % sealing in completely cast units.

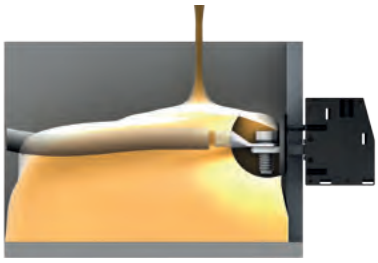

All Through-Panel Terminals terminals are available with pins (WGK.../Z) for easy locking. Multi-pole blocks can be built up quickly and easily.

Clearance and creepage distances to other components must be devised in accordance with the relevant application standard. This can be achieved in the device by full encapsulation or by the use of additional spacer plates.

Distance plates (DP WGK...) can be easily mounted with locking pins.

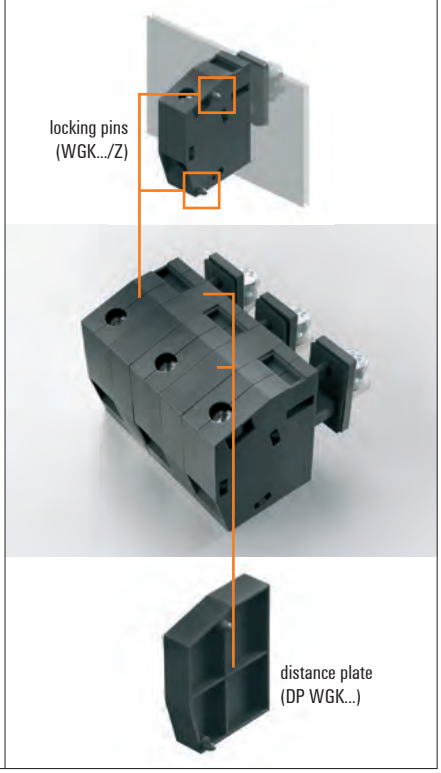

Fast and easy design in online CAD models. The CAD models for OMNIMATE Power WGK lead-through terminals can be found in Weidmüller's online catalogue and in the PART community.

http://catalog.weidmueller.com/

http://weidmueller.partcommunity.com/

http://www.OMNIMATE.net

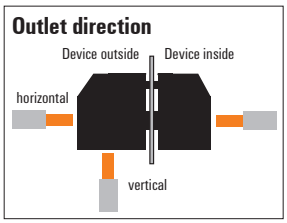

Through-Panel terminals - WGK

Device Outside Type of connection	Device Inside Type of connection	Clamping range IEC Clamping range UL	Max. rated voltage IEC Nominal current UL		Type	Outlet direction
PUSH IN	PUSH IN	0.5 - 4 mm² 24 - 10 AWG	32 A 30 A		PGK 4	horizontal
Screw Clamping yoke	Solder connection	0.5 - 6 mm² 30 - 10 AWG	32 A 30 A		VWGK 4	horizontal
		0.5 - 10 mm² 22 - 8 AWG	41 A 50 A		VWGK 6	horizontal
	Screw Clamping yoke	0.5 - 6 mm² 30 - 10 AWG	32 A 30 A		WGK 4 WGKV 4	horizontal vertical
		0.5 - 16 mm² 24 - 6 AWG	57 A 65 A		WGK 10 WGKV 10	horizontal vertical
	Screw Clamping yoke	0.5 - 25 mm² 20 - 4 AWG	76 A 85 A		WGK 16 WGKV 16	horizontal vertical
	Cable lug				WGK 16 VP	horizontal
	Screw Clamping yoke	6 - 35 mm² 10 - 3 AWG	101 A 100 A		WGK 25 WGKV 25	horizontal vertical
	Cable lug				WGK 25 VP	horizontal
	Screw Clamping yoke	16 - 50 mm² 6 - 1/0 AWG	150 A 145 A		WGK 50	horizontal
	Cable lug				WGK 50 VP	horizontal
	Screw Clamping yoke	35 - 95 mm² 4 - 4/0 AWG	232 A 230 A		WGK 95	horizontal
	Cable lug				WGK 95 F VP	horizontal

Max. rated voltage IEC	400 V	500 V	690 V	1,000 V
Nominal voltage UL	300 V	600 V		
		○		
		○		
		○		
	○			
		○		
			○	
			○	
			○	
			○	
			○	
			○	
				○
				○

Through-Panel Terminals for devices
Series PGK 4 - "PUSH IN" connection

Max. clamping range: 4 mm²

The PGK 4 device feed-through terminal is the fastest and most compact solution for feed-throughs in housings.

The innovative "PUSH IN" connection system from Weidmüller makes for a simple, tool-free wire connection on the inside and outside of devices. The sliced design and an intuitive fastening mechanism enable high-density blocks to be constructed quickly and easily.

Product data

IEC: 500 V / 32 A / 0.5 - 4 mm²
UL: 300 V / 30 A / AWG 24 - 10

72h

For additional articles and information, refer to catalog.weidmueller.com

Note:
- Packing unit incl. 30 locking elements (VREL PGK 4 OR – 1288610000)
- End plate required
- Clearance and creepage distances to other components must be devised in accordance with the relevant application standard. This can be achieved in the device by full encapsulation or by the use of additional spacer plates.
- Rated data refer only to the component itself. Clearance and creepage distances to other components are to be designed in accordance with the relevant application standards.
- Colours: BK = black; GN/YL = green yellow; none = grey
- Additional colours on request

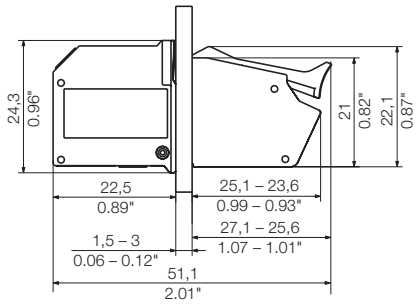

PGK 4

"PUSH IN" connection

Dimensioned drawing

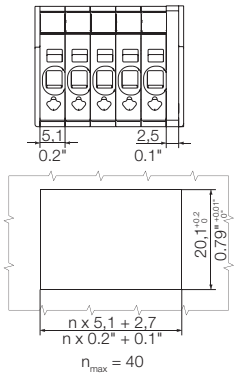

Technical data

In compliance with IEC 60664-1 / IEC 61984				
Clamping range, max.	mm²	0.5...4		
Solid core H05(07) V-U	**mm²**	**0.5...4**		
Stranded H07 V-R				
Flexible H05(07) V-K	mm²	0.5...4		
Flexible with ferrule	mm²	0.5...4		
Ferrule with plastic collar	mm²	0.5...2.5		
Stripping length	mm	12		
Screwdriver blade	mm	0.4 x 2.5		
According to norm				
Tightening torque range	Nm			
Rated current, max.	**A**	**32**		
At ambient temperature		20°C		40°C
For conductor cross-section	mm²	4		
Overvoltage category		III	III	II
Pollution severity		3	2	2
Rated voltage	**V**	**500**		
Rated impulse voltage	kV	6		
UL / CUL (Use Group)		**B**	**C**	**D**
Rated voltage	**V**	**300**	**150**	**300**
Rated current	**A**	**30**	**30**	**30**
AWG conductor	**AWG**	**24-10**		
CSA (Use Group)		**B**	**C**	**D**
Rated voltage	V	300	150	300
Rated current	A	30	30	30
AWG conductor	AWG	24-10		
General data				
Type of insulation material		Wemid (PA)		
UL 94 flammability rating		V-0		
Contact base material		E-Cu		
Material of contact surface		tinned		
Pin dimensions = d	mm			
Solder eyelet Ø = D	mm			
Solder eyelet Ø tolerance	mm			

Accessories

Note: Refer to the Accessories chapter for additional accessories.

Additional locking		Order No.
	VREL PGK4 OR	1288610000
Testing / Checking		
	PS 2.3 RT	0180400000
Screwdriver		
	SDS 0.4X2.5X75	9009030000
	SDS 0.5X3.0X80	9008320000
Crimping tool		
	PZ 6/5	9011460000

Ordering data

Type	Qty.	Order No. (With lock pins)
PGK 4 BK	100	1288470000

J

4 mm²

PGK 4 BT

"PUSH IN" connection

Dimensioned drawing

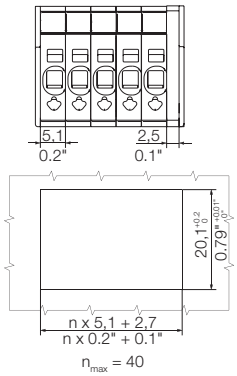

Ordering data

With lock pins

Type	Qty.	Order No.
PGK 4 BT BK	100	1288590000

EPL PGK 4

Dimensioned drawing

Ordering data

With lock pins

Type	Qty.	Order No.
EPL PGK4 BK	50	1288600000

Through-Panel Terminals for devices
Series WGK - connects up to 95 mm²

Max. clamping range: 6 mm²

The high-current feed-through terminals of the WGK series provide a universal solution for feeding currents of different magnitude through the enclosure wall.

Various types of connection on the inside such as solder connections which can be encapsulated (VWGK...), cable lug connections (WGK ...VP) and maintenance-free clamping yoke screw connections (WGK...) with vertical and horizontal wire insertion provide the optimal connection for any installation situation.

Terminals with locking pins are available for simple and fast assembly for multi-pole blocks.

Product data

IEC: 500 V / 32 A / 0.5 - 6 mm²
UL: 300 V / 30 A / AWG 30 - 10

72h

For additional articles and information, refer to catalog.weidmueller.com

Note:
- Clearance and creepage distances to other components must be devised in accordance with the relevant application standard. This can be achieved in the device by full encapsulation or by the use of additional spacer plates.
- Rated data refer only to the component itself. Clearance and creepage distances to other components are to be designed in accordance with the relevant application standards.
- Colours: SW = black; GN/YL = green yellow; none = grey
- Additional colours on request
- WGK: Rated voltage plastic walls: 1 - 4 mm = 500 V; metal walls: 1 - 2.5 mm = 400 V; metal walls: 2.5 - 4 mm = 250 V
- WGKV: Rated voltage plastic walls: 1 - 4 mm = 400 V; metal walls: 1 - 2.5 mm = 400 V; metal walls: 2.5 - 4 mm = 250 V
- VWGK: Rated voltage plastic walls: 1 - 4 mm = 500 V; metal walls: 1 - 4 mm = 500 V

WGK 4

Screw connection

Dimensioned drawing

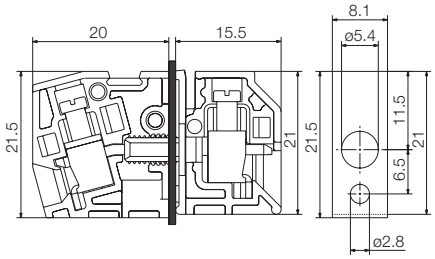

Technical data

In compliance with IEC 60664-1 / IEC 61984				
Clamping range, max.	mm²	0.5...6		
Solid core H05(07) V-U	**mm²**	**0.5...6**		
Stranded H07 V-R	mm²			
Flexible H05(07) V-K	mm²	0.5...4		
Flexible with ferrule	mm²	0.5...4		
Ferrule with plastic collar	mm²			
Stripping length	mm	8		
Screwdriver blade	mm	0.6 x 3.5		
According to norm				
Tightening torque range	Nm	0.6...0.8		
Rated current, max.	**A**	**32**		
At ambient temperature		20°C		40°C
For conductor cross-section	mm²	4		
Overvoltage category		III	III	II
Pollution severity		3	2	2
Rated voltage	**V**	**500**		
Rated impulse voltage	kV	6		
UL / CUL (Use Group)		**B**	**C**	**D**
Rated voltage	**V**	**300**		
Rated current	**A**	**30**		
AWG conductor	**AWG**	**30-10**		
CSA (Use Group)		**B**	**C**	**D**
Rated voltage	V	300		
Rated current	A	30		
AWG conductor	AWG	30-10		
General data				
Type of insulation material		Wemid (PA)		
UL 94 flammability rating		V-0		
Contact base material		E-Cu		
Material of contact surface		tinned		
Pin dimensions = d	mm			
Solder eyelet Ø = D	mm			
Solder eyelet Ø tolerance	mm			

Accessories

Note: Refer to the Accessories chapter for additional accessories.

Distance plate		**Order No.**
	DP VWGK 4 SW	**1251030000**
	DP VWGK4	**1936430000**
	DP WGK 4	**1936450000**
	DP WGK 4 SW	**1297840000**
	DP WGKV 4	**1936470000**
Screwdriver		
	SDIS 0.6X3.5X100	**9008390000**
Identification systems		
	DEK 5/5 MC-10 NE WS	**1609801044**
	DEK 5/6 MC NE WS	**1609820000**
	DEK 5/8 MC NE WS	**1856740000**

Ordering data

		With lock pins	No lock pins
Type	**Qty.**	**Order No.**	**Order No.**
WGK 4/Z SW	50	**1250940000**	
WGK 4/Z gn/ye	50	**1936560000**	
WGK 4/Z	50	**1936570000**	
WGK 4 SW	50		**1250930000**
WGK 4 GN/YE	50		**1936540000**
WGK 4	50		**1936550000**

J

6 mm²

WGKV 4

Screw connection

Dimensioned drawing

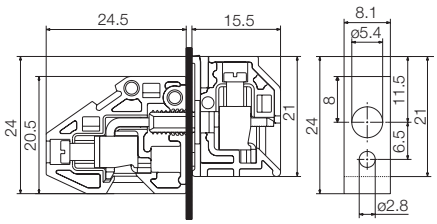

Ordering data

Type	Qty.	With lock pins Order No.	No lock pins Order No.
WGKV 4/Z SW	50	1250960000	
WGKV 4/Z gn/ye	50	1936620000	
WGKV 4/Z	50	1936630000	
WGKV 4 SW	50		1250950000
WGKV 4 gn/ye	50		1936610000
WGKV 4	50		1934050000

WGK 4 VP

Solder connection

Dimensioned drawing

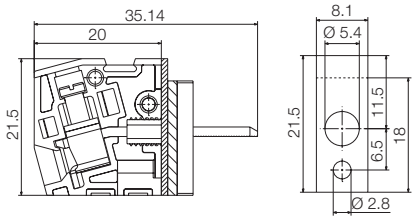

Ordering data

Type	Qty.	With lock pins Order No.	No lock pins Order No.
WGK 4 VP/Z BK	50	1339810000	
WGK 4 VP/Z GN/YE	50	1003900000	
WGK 4 VP/Z	50	1003910000	
WGK 4 VP BK	50		1339790000
WGK 4 VP GN/YE	50		1003890000
WGK 4 VP	50		1981890000

For the rated voltage of plastic and metal walls, see the "WGK" notes

VWGK 4

Solder connection

Dimensioned drawing

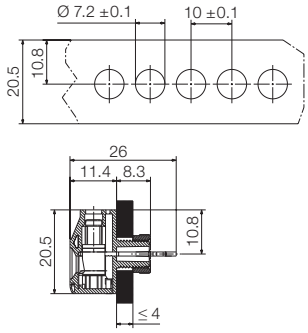

Ordering data

Type	Qty.	With lock pins Order No.
VWGK 4 SW	50	1250650000
VWGK 4 GN/YE	50	1936480000
VWGK 4	50	1936490000

Through-Panel Terminals for devices
Series WGK - connects up to 95 mm²

Max. clamping range: 10 mm²

The V versions of the WGK feed-through terminal with an insulated housing and clamping yoke connection on the outside, and a solder connection on the inside. Optimal connection options for use in encapsulated devices (e.g. EMC filters and/or fully insulated transformers).

Terminals with locking pins are available for simple and fast assembly of multi-pole blocks.

Product data

IEC: 500 V / 41 A / 0.5 - 10 mm²
UL: 300 V / 50 A / AWG 22 - 10

72h

For additional articles and information, refer to catalog.weidmueller.com

Note:
- Clearance and creepage distances to other components must be devised in accordance with the relevant application standard. This can be achieved in the device by full encapsulation or by the use of additional spacer plates.
- Rated data refer only to the component itself. Clearance and creepage distances to other components are to be designed in accordance with the relevant application standards.
- Colours: SW = black; GN/YL = green yellow; none = grey
- Additional colours on request
- VWGK: Rated voltage plastic walls: 1 - 4 mm = 500 V; metal walls: 1 - 4 mm = 500 V

VWGK 6

Solder connection

Dimensioned drawing

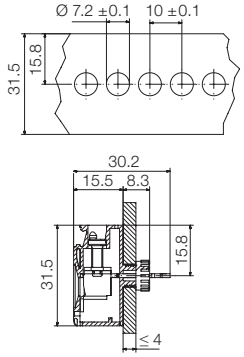

Technical data

In compliance with IEC 60664-1 / IEC 61984				
Clamping range, max.	mm²	0.5...10		
Solid core H05(07) V-U	**mm²**	**0.5...10**		
Stranded H07 V-R	mm²	...6		
Flexible H05(07) V-K	mm²	0.5...6		
Flexible with ferrule	mm²	0.5...6		
Ferrule with plastic collar	mm²			
Stripping length	mm	13		
Screwdriver blade	mm	0.8 x 4.0		
According to norm				
Tightening torque range	Nm	0.8...1.8		
Rated current, max.	**A**	**41**		
At ambient temperature		20°C		40°C
For conductor cross-section	mm²	6		
Overvoltage category		III	III	II
Pollution severity		3	2	2
Rated voltage	**V**	**500**		
Rated impulse voltage	kV	6		
UL / CUL (Use Group)		**B**	**C**	**D**
Rated voltage	**V**	**300**		
Rated current	**A**	**50**		
AWG conductor	**AWG**	**22-10**		
CSA (Use Group)		**B**	**C**	**D**
Rated voltage	V	300		
Rated current	A	50		
AWG conductor	AWG	22-10		
General data				
Type of insulation material		Wemid (PA)		
UL 94 flammability rating		V-0		
Contact base material		E-Cu		
Material of contact surface		tinned		
Pin dimensions = d	mm			
Solder eyelet Ø = D	mm			
Solder eyelet Ø tolerance	mm			

Accessories

Note: Refer to the Accessories chapter for additional accessories.

Distance plate		Order No.
	DP VWGK 6 SW	1250630000
	DP VWGK6	1965750000
Screwdriver		
	SDIS 0.8X4.0X100	9008400000
Identification systems		
	DEK 5/5 MC-10 NE WS	1609801044
	DEK 5/6 MC NE WS	1609820000
	DEK 5/8 MC NE WS	1856740000

Ordering data

With lock pins

Type	Qty.	Order No.
VWGK 6 SW	50	1250640000
VWGK 6 GN/YE	50	1965730000
VWGK 6	50	1965740000

J

10 mm²

Variants

The WGK...VP, VWGK 4 and VWGK 6 variants of the WGK series, with an insulating housing and clamping yoke connection on the outside, are specially enhanced for use in potted and through-panel applications.
These products are developed for 100 % sealing in completely enclosed units..

WGK variants are used, for example, as device connections for EMC filters or fully insulated transformers.

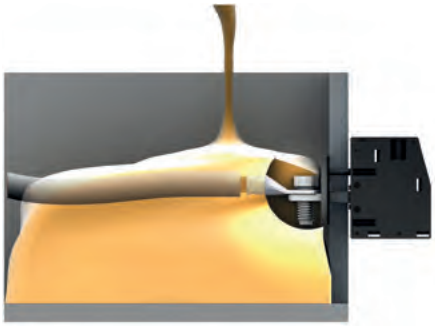

Clamping yoke screw connection

The clamping yoke connection is a proven connection in use around the world today.
Steel clamping yokes made using a stamping and bending process guarantee a vibration proof clamp connection.
When the screw on the clamp is tightened, there is a counter effect in the clamping yoke's threaded area which prevents the connection accidentally loosening.
As the screw thread is on an inclined plane, the force is amplified and a very high clamping force is achieved.
Weidmüller uses hardened steel with optimised corrosion protection for stability and safety in addition to copper alloys in the contact area for good electrical conductivity.

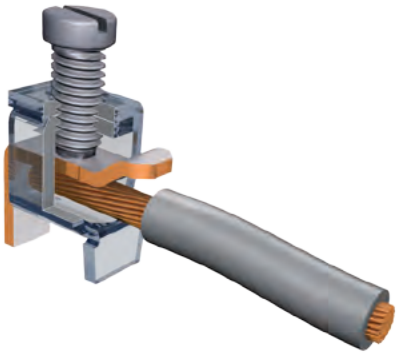

Through-Panel Terminals for devices
Series WGK - connects up to 95 mm²

Max. clamping range: 16 mm²

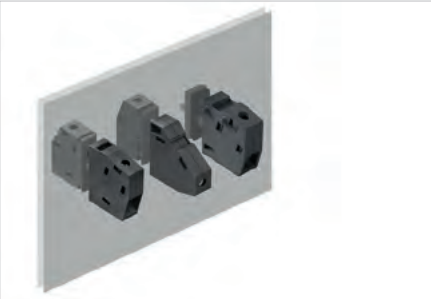

The high-current feed-through terminals of the WGK series provide a universal solution for feeding currents of different magnitude through the enclosure wall.

Different types of connection on the inside, such as a solder connection which can be encapsulated (WGK ...VP) or a maintenance-free clamping yoke screw connection (WGK...) with vertical and horizontal wire connections, provide the optimal connection for any installation situation.

Terminals with locking pins are available for simple and fast assembly of multi-pole blocks.

Product data

IEC: 500 V / 57 A / 0.5 - 16 mm²
UL: 300 V / 65 A / AWG 24 - 6

72h

For additional articles and information, refer to catalog.weidmueller.com

Note:
- Clearance and creepage distances to other components must be devised in accordance with the relevant application standard. This can be achieved in the device by full encapsulation or by the use of additional spacer plates.
- Rated data refer only to the component itself. Clearance and creepage distances to other components are to be designed in accordance with the relevant application standards.
- Colours: SW = black; GN/YL = green yellow; none = grey
- Additional colours on request
- WGK: Rated voltage plastic walls: 1 - 4 mm = 500 V; metal walls: 1 - 2.5 mm = 400 V; metal walls: 2.5 - 4 mm = 250 V

WGK 10

Screw connection

Dimensioned drawing

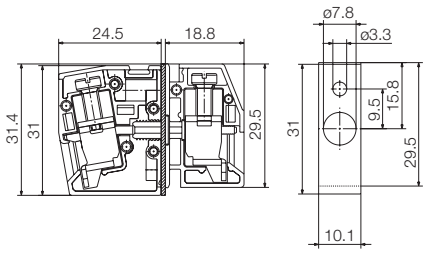

Technical data

In compliance with IEC 60664-1 / IEC 61984				
Clamping range, max.	mm²	0.5...16		
Solid core H05(07) V-U	**mm²**	**0.5...16**		
Stranded H07 V-R	mm²	10...16		
Flexible H05(07) V-K	mm²	0.5...10		
Flexible with ferrule	mm²	0.5...10		
Ferrule with plastic collar	mm²			
Stripping length	mm	11		
Screwdriver blade	mm	0.8 x 4.0		
According to norm				
Tightening torque range	Nm	5...7		
Rated current, max.	**A**	**57**		
At ambient temperature		20°C		40°C
For conductor cross-section	mm²	10		
Overvoltage category		III	III	II
Pollution severity		3	2	2
Rated voltage	**V**	**500**		
Rated impulse voltage	kV	6		
UL / CUL (Use Group)		**B**	**C**	**D**
Rated voltage	**V**	**300**		
Rated current	**A**	**65**		
AWG conductor	**AWG**	**24-6**		
CSA (Use Group)		**B**	**C**	**D**
Rated voltage	V	300		
Rated current	A	65		
AWG conductor	AWG	24-6		
General data				
Type of insulation material		Wemid (PA)		
UL 94 flammability rating		V-0		
Contact base material		E-Cu		
Material of contact surface		tinned		
Pin dimensions = d	mm			
Solder eyelet Ø = D	mm			
Solder eyelet Ø tolerance	mm			

16 mm²

Accessories

Note: Refer to the Accessories chapter for additional accessories.

Distance plate		**Order No.**
	DP WGK 10	**1936440000**
	DP WGK 10 SW	**1250570000**
	DP WGKV 10	**1936460000**
Screwdriver		
	SDIS 0.8X4.0X100	**9008400000**
Identification systems		
	DEK 5/5 MC-10 NE WS	**1609801044**
	DEK 5/6 MC NE WS	**1609820000**
	DEK 5/8 MC NE WS	**1856740000**

Ordering data

			With lock pins	No lock pins
Type	**Qty.**	**Order No.**	**Order No.**	
WGK 10/Z SW	50	**1250890000**		
WGK 10/Z gn/ye	50	**1936520000**		
WGK 10/Z	50	**1936530000**		
WGK 10 SW	50		**1250880000**	
WGK 10 GN/YE	50		**1936500000**	
WGK 10	50		**1936510000**	

WGKV 10

Screw connection

Dimensioned drawing

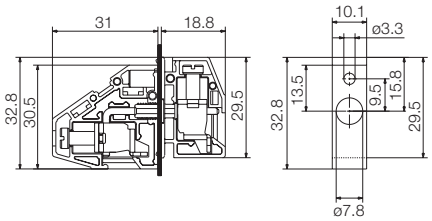

Ordering data

		With lock pins	No lock pins
Type	**Qty.**	**Order No.**	**Order No.**
WGKV 10/Z SW	50	**1250920000**	
WGKV 10/Z gn/ye	50	**1936590000**	
WGKV 10/Z	50	**1936600000**	
WGKV 10 SW	50		**1250910000**
WGKV 10 gn/ye	50		**1936580000**
WGKV 10	50		**1934060000**

For the rated voltage of plastic and metal walls, see the "WGK" notes

WGK 10 VP

Dimensioned drawing

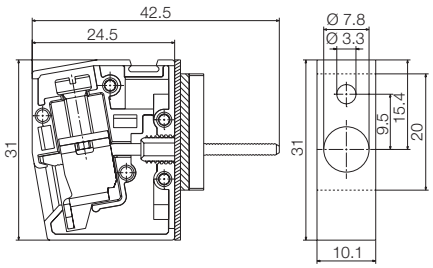

Ordering data

		With lock pins	No lock pins
Type	**Qty.**	**Order No.**	**Order No.**
WGK 10 VP/Z BK	50	**1469900000**	
WGK 10 VP/Z GN/YE	50	**1003970000**	
WGK 10 VP/Z	50	**1003920000**	
WGK 10 VP BK	50		**1469890000**
WGK 10 VP GN/YE	50		**1003960000**
WGK 10 VP	50		**1981880000**

For the rated voltage of plastic and metal walls, see the "WGK" notes

Variants

The WGK...VP, VWGK 4 and VWGK 6 variants of the WGK series, with an insulating housing and clamping yoke connection on the outside, are specially enhanced for use in potted and through-panel applications.
These products are developed for 100 % sealing in completely enclosed units..

WGK variants are used, for example, as device connections for EMC filters or fully insulated transformers.

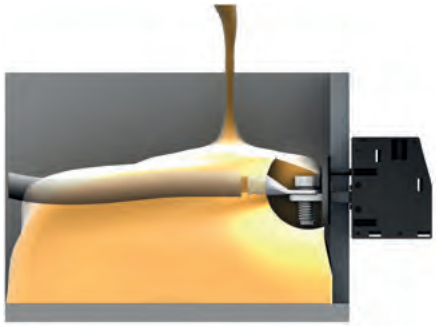

Clamping yoke screw connection

The clamping yoke connection is a proven connection in use around the world today.
Steel clamping yokes made using a stamping and bending process guarantee a vibration proof clamp connection.
When the screw on the clamp is tightened, there is a counter effect in the clamping yoke's threaded area which prevents the connection accidentally loosening.
As the screw thread is on an inclined plane, the force is amplified and a very high clamping force is achieved.
Weidmüller uses hardened steel with optimised corrosion protection for stability and safety in addition to copper alloys in the contact area for good electrical conductivity.

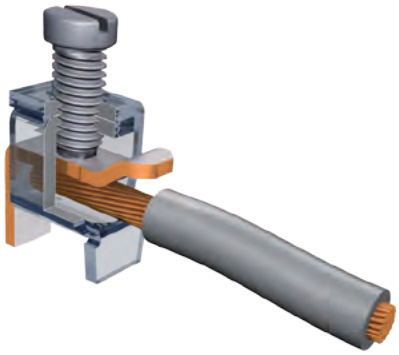

Through-Panel Terminals for devices
Series WGK - connects up to 95 mm²

Max. clamping range: 25 mm²

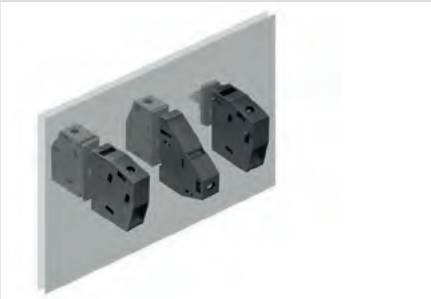

The high-current feed-through terminals of the WGK series provide a universal solution for feeding currents of different magnitude through the enclosure wall.

Various types of connection on the inside, such as cable lug connections which can be encapsulated (WGK ...VP) and maintenance-free clamping yoke screw connections (WGK...) with vertical and horizontal wire insertion provide the optimal connection for any installation situation.

Terminals with locking pins are available for simple and fast assembly of mutli-pole blocks.

Product data

IEC: 500 V / 76 A / 0.5 - 16 mm²
UL: 600 V / 85 A / AWG 20 - 4

72h

For additional articles and information, refer to catalog.weidmueller.com

Note:
- Clearance and creepage distances to other components must be devised in accordance with the relevant application standard. This can be achieved in the device by full encapsulation or by the use of additional spacer plates.
- Rated data refer only to the component itself. Clearance and creepage distances to other components are to be designed in accordance with the relevant application standards.
- Colours: SW = black; GN/YL = green yellow; none = grey
- Additional colours on request
- WGK: Rated voltage plastic walls: 1 - 6 mm = 800 V; metal walls: 1 - 2.5 mm = 800 V; metal walls: 2.5 - 4 mm = 690 V; metal walls: 4 - 6 mm = 500 V

WGK 16

Screw connection

Dimensioned drawing

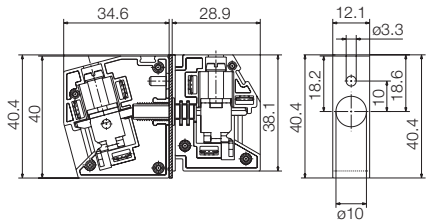

Technical data

In compliance with IEC 60664-1 / IEC 61984				
Clamping range, max.	mm²	0.5...25		
Solid core H05(07) V-U	**mm²**	**0.5...16**		
Stranded H07 V-R	mm²	10...25		
Flexible H05(07) V-K	mm²	0.5...16		
Flexible with ferrule	mm²	0.5...16		
Ferrule with plastic collar	mm²			
Stripping length	mm	16		
Screwdriver blade	mm	1.0 x 5.5		
According to norm				
Tightening torque range	Nm	2...2.3		
Rated current, max.	**A**	**76**		
At ambient temperature		20°C		40°C
For conductor cross-section	mm²	16		
Overvoltage category		III	III	II
Pollution severity		3	2	2
Rated voltage	**V**	**500**		
Rated impulse voltage	kV	6		
UL / CUL (Use Group)		**B**	**C**	**D**
Rated voltage	**V**	**600**		
Rated current	**A**	**85**		
AWG conductor	**AWG**	**20-4**		
CSA (Use Group)		**B**	**C**	**D**
Rated voltage	V	600		
Rated current	A	85		
AWG conductor	AWG	20-4		
General data				
Type of insulation material		Wemid (PA)		
UL 94 flammability rating		V-0		
Contact base material		E-Cu		
Material of contact surface		tinned		
Pin dimensions = d	mm			
Solder eyelet Ø = D	mm			
Solder eyelet Ø tolerance	mm			

Accessories

Note: Refer to the Accessories chapter for additional accessories.

Distance plate		**Order No.**
	DP WGK 16	**1936700000**
	DP WGK 16 SW	**1250580000**
Screwdriver		
	SDIS 1.0X5.5X125	**9008410000**
Identification systems		
	DEK 5/5 MC-10 NE WS	**1609801044**
	DEK 5/6 MC NE WS	**1609820000**
	DEK 5/8 MC NE WS	**1856740000**

Ordering data

		With lock pins	No lock pins
Type	**Qty.**	**Order No.**	**Order No.**
WGK 16/Z SW	50	**1250870000**	
WGK 16/Z gn/ye	50	**1936820000**	
WGK 16/Z	50	**1936830000**	
WGK 16 SW	50		**1250860000**
WGK 16 gn/ye	50		**1936760000**
WGK 16	50		**1936810000**

J

25 mm²

WGKV 16

Screw connection

Dimensioned drawing

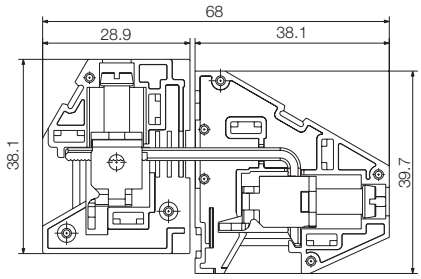

WGK 16 VP

Cable lug connection

Dimensioned drawing

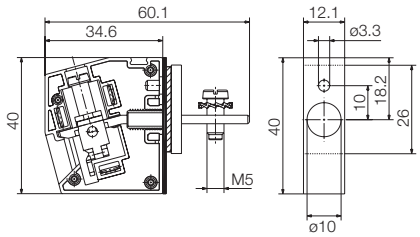

Variants

The WGK...VP, VWGK 4 and VWGK 6 variants of the WGK series, with an insulating housing and clamping yoke connection on the outside, are specially enhanced for use in potted and through-panel applications.
These products are developed for 100 % sealing in completely enclosed units..

WGK variants are used, for example, as device connections for EMC filters or fully insulated transformers.

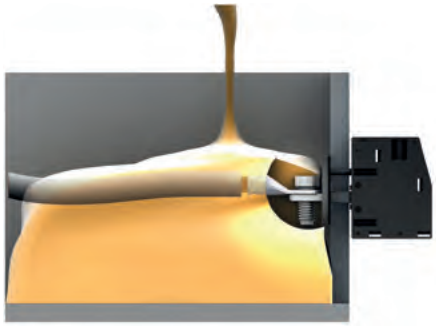

Ordering data

Type	Qty.	With lock pins Order No.	No lock pins Order No.
WGKV 16/Z SW	50	1250850000	
WGKV 16/Z GN/YE	50	1003930000	
WGKV 16/Z	50	1003940000	
WGKV 16 SW	50		1250840000
WGKV 16 GN/YE	50		1003950000
WGKV 16	50		1003880000

For the rated voltage of plastic and metal walls, see the "WGK" notes

Ordering data

Type	Qty.	With lock pins Order No.	No lock pins Order No.
WGK 16 VP/Z SW	50	1250830000	
WGK 16 VP/Z GN/YE	50	1936790000	
WGK 16 VP/Z	50	1936800000	
WGK 16 VP SW	50		1250820000
WGK 16 VP GN/YE	50		1936770000
WGK 16 VP	50		1936780000

For the rated voltage of plastic and metal walls, see the "WGK" notes

Clamping yoke screw connection

The clamping yoke connection is a proven connection in use around the world today.
Steel clamping yokes made using a stamping and bending process guarantee a vibration proof clamp connection.
When the screw on the clamp is tightened, there is a counter effect in the clamping yoke's threaded area which prevents the connection accidentally loosening.
As the screw thread is on an inclined plane, the force is amplified and a very high clamping force is achieved.
Weidmüller uses hardened steel with optimised corrosion protection for stability and safety in addition to copper alloys in the contact area for good electrical conductivity.

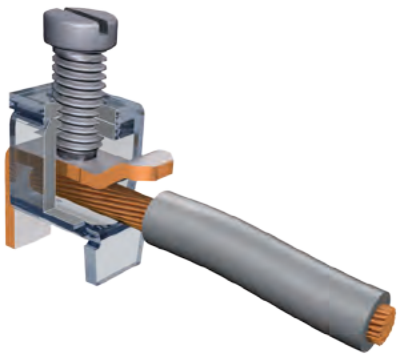

Through-Panel Terminals for devices
Series WGK - connects up to 95 mm²

Max. clamping range: 35 mm²

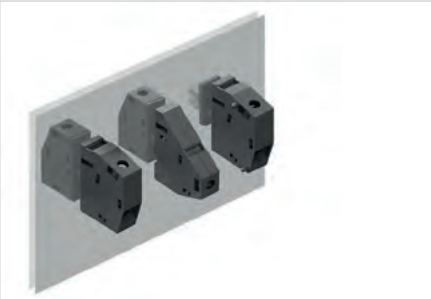

The high-current feed-through terminals of the WGK series provide a universal solution for feeding currents of different magnitude through the enclosure wall.

Various types of connection on the inside, such as cable lug connections which can be encapsulated (WGK ...VP) and maintenance-free clamping yoke screw connections (WGK...) with vertical and horizontal wire insertion provide the optimal connection for any installation situation.

Terminals with locking pins are available for simple and fast assembly of multi-pole blocks.

Product data

IEC: 690 V / 101 A / 6 - 16 mm²
UL: 600 V / 100 A / AWG 10 - 3

72h

For additional articles and information, refer to catalog.weidmueller.com

Note:
- Clearance and creepage distances to other components must be devised in accordance with the relevant application standard. This can be achieved in the device by full encapsulation or by the use of additional spacer plates.
- Rated data refer only to the component itself. Clearance and creepage distances to other components are to be designed in accordance with the relevant application standards.
- Colours: SW = black; GN/YL = green yellow; none = grey
- Additional colours on request
- WGK: Rated voltage plastic walls: 1 - 6 mm = 800 V; metal walls: 1 - 4 mm = 800 V; metal walls: 4 - 6 mm = 690 V
- WGKV: Rated voltage plastic walls: 1 - 6 mm = 800 V; metal walls: 1 - 4 mm = 800 V; metal walls: 4 - 6 mm = 690 V
- WGK...VP: Rated voltage plastic walls: 1 - 6 mm = 800 V; metal walls: 1 - 2.5 mm = 800 V; metal walls: 2.5 - 4 mm = 690 V; metal walls: 4 - 6 mm = 500 V

WGK 25

Screw connection

Dimensioned drawing

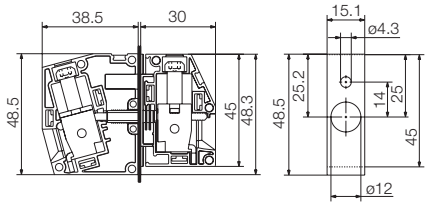

Technical data

In compliance with IEC 60664-1 / IEC 61984				
Clamping range, max.	mm²	4...35		
Solid core H05(07) V-U	**mm²**	**6...16**		
Stranded H07 V-R	mm²	10...35		
Flexible H05(07) V-K	mm²	6...16		
Flexible with ferrule	mm²	4...25		
Ferrule with plastic collar	mm²			
Stripping length	mm	18		
Screwdriver blade	mm	1.2 x 6.5		
According to norm				
Tightening torque range	Nm	4...4.5		
Rated current, max.	**A**	**101**		
At ambient temperature		20°C		40°C
For conductor cross-section	mm²	25		
Overvoltage category		III	III	II
Pollution severity		3	2	2
Rated voltage	**V**	**690**		
Rated impulse voltage	kV	6		
UL / CUL (Use Group)		**B**	**C**	**D**
Rated voltage	**V**	**600**		
Rated current	**A**	**100**		
AWG conductor	**AWG**	**10-3**		
CSA (Use Group)		**B**	**C**	**D**
Rated voltage	V	600		
Rated current	A	100		
AWG conductor	AWG	10-3		
General data				
Type of insulation material		Wemid (PA)		
UL 94 flammability rating		V-0		
Contact base material		E-Cu		
Material of contact surface		tinned		
Pin dimensions = d	mm			
Solder eyelet Ø = D	mm			
Solder eyelet Ø tolerance	mm			

25 mm²

Accessories

Note: Refer to the Accessories chapter for additional accessories.

Distance plate		**Order No.**
	DP WGK 25	**1936710000**
	DP WGK 25 SW	**1250590000**
	DP WGKV 25	**1936690000**
Screwdriver		
	SDIS 1.2X6.5X150	**9008420000**
Identification systems		
	DEK 5/5 MC-10 NE WS	**1609801044**
	DEK 5/6 MC NE WS	**1609820000**
	DEK 5/8 MC NE WS	**1856740000**

Ordering data

		With lock pins	No lock pins
Type	**Qty.**	**Order No.**	**Order No.**
WGK 25/Z SW	50	**1250810000**	
WGK 25/Z GN/YE	50	**1936900000**	
WGK 25/Z	50	**1936910000**	
WGK 25 SW	50		**1250790000**
WGK 25 GN/YE	50		**1936840000**
WGK 25	50		**1936850000**

WGKV 25

Screw connection

Dimensioned drawing

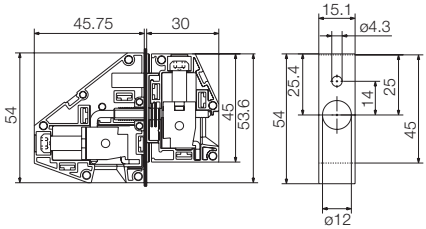

WGK 25 VP

Cable lug connection

Dimensioned drawing

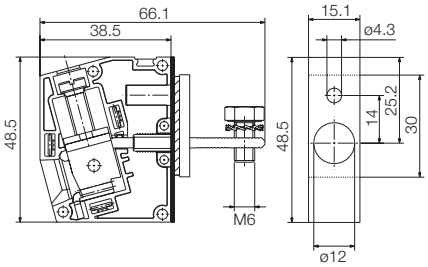

Variants

The WGK...VP, VWGK 4 and VWGK 6 variants of the WGK series, with an insulating housing and clamping yoke connection on the outside, are specially enhanced for use in potted and through-panel applications.
These products are developed for 100 % sealing in completely enclosed units..

WGK variants are used, for example, as device connections for EMC filters or fully insulated transformers.

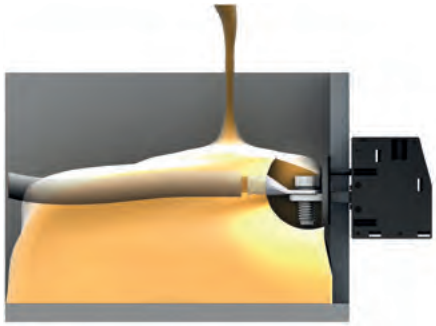

Ordering data

Type	Qty.	With lock pins Order No.	No lock pins Order No.
WGKV 25/Z SW	25	1250780000	
WGKV 25/Z gn/ye	25	1936740000	
WGKV 25/Z	25	1936750000	
WGKV 25 SW	25		1250770000
WGKV 25 gn/ye	25		1936720000
WGKV 25	25		1934070000

Rated voltage for plastic and metal walls such as WGK

Ordering data

Type	Qty.	With lock pins Order No.	No lock pins Order No.
WGK 25 VP/Z SW	50	1250760000	
WGK 25 VP/Z GN/YE	50	1936880000	
WGK 25 VP/Z	50	1936890000	
WGK 25 VP SW	50		1250750000
WGK 25 VP GN/YE	50		1936860000
WGK 25 VP	50		1936870000

Clamping yoke screw connection

The clamping yoke connection is a proven connection in use around the world today.
Steel clamping yokes made using a stamping and bending process guarantee a vibration proof clamp connection.
When the screw on the clamp is tightened, there is a counter effect in the clamping yoke's threaded area which prevents the connection accidentally loosening.
As the screw thread is on an inclined plane, the force is amplified and a very high clamping force is achieved.
Weidmüller uses hardened steel with optimised corrosion protection for stability and safety in addition to copper alloys in the contact area for good electrical conductivity.

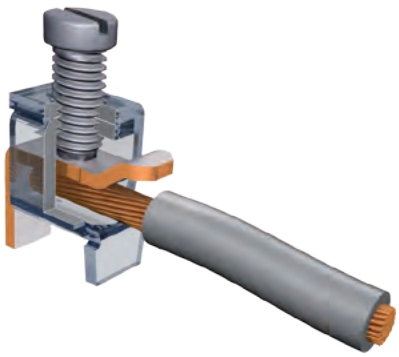

Through-Panel Terminals for devices
Series WGK - connects up to 95 mm²

Max. clamping range: 50 mm²

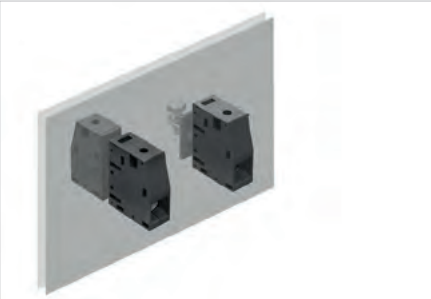

The high-current feed-through terminals of the WGK series provide a universal solution for feeding currents of different magnitude through the enclosure wall.

Various types of connection on the inside, such as cable lug connections which can be encapsulated (WGK ...VP) and maintenance-free clamping yoke screw connections (WGK...) provide the optimal connection for any installation situation.

Terminals with locking pins are available for simple and fast assembly of multi-pole blocks.

Product data

IEC: 690 V / 150 A / 16 - 50 mm²
UL: 600 V / 145 A / AWG 6 - 1/0

72h

For additional articles and information, refer to catalog.weidmueller.com

Note:
- Clearance and creepage distances to other components must be devised in accordance with the relevant application standard. This can be achieved in the device by full encapsulation or by the use of additional spacer plates.
- Rated data refer only to the component itself. Clearance and creepage distances to other components are to be designed in accordance with the relevant application standards.
- Colours: SW = black; GN/YL = green yellow; none = grey
- Additional colours on request
- WGK: Rated voltage plastic walls: 1 - 6 mm = 800 V; metal walls: 1 - 2.5 mm = 800 V; metal walls: 2.5 - 6 mm = 690 V

WGK 50

Screw connection

Dimensioned drawing

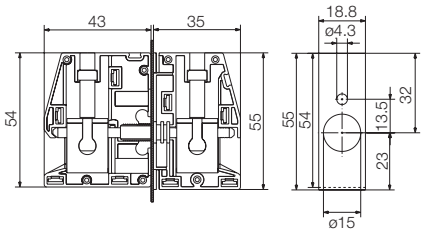

Technical data

In compliance with IEC 60664-1 / IEC 61984				
Clamping range, max.	mm²	10...50		
Solid core H05(07) V-U	**mm²**	**16...50**		
Stranded H07 V-R	mm²	16...50		
Flexible H05(07) V-K	mm²	16...50		
Flexible with ferrule	mm²	10...50		
Ferrule with plastic collar	mm²			
Stripping length	mm	24		
Screwdriver blade	mm	1.2 x 6.5		
According to norm				
Tightening torque range	Nm	4...8		
Rated current, max.	**A**	**150**		
At ambient temperature		20°C		40°C
For conductor cross-section	mm²	50		
Overvoltage category		III	III	II
Pollution severity		3	2	2
Rated voltage	**V**	**690**		
Rated impulse voltage	kV	6		
UL / CUL (Use Group)		**B**	**C**	**D**
Rated voltage	**V**	**600**		
Rated current	**A**	**145**		
AWG conductor	**AWG**	**6-1/0**		
CSA (Use Group)		**B**	**C**	**D**
Rated voltage	V	600		
Rated current	A	145		
AWG conductor	AWG	6-1/0		
General data				
Type of insulation material		Wemid (PA)		
UL 94 flammability rating		V-0		
Contact base material		E-Cu		
Material of contact surface		tinned		
Pin dimensions = d	mm			
Solder eyelet Ø = D	mm			
Solder eyelet Ø tolerance	mm			

Accessories

Note: Refer to the Accessories chapter for additional accessories.

Distance plate		**Order No.**
	DP WGK 50	**1937030000**
	DP WGK 50 SW	**1250610000**
Screwdriver		
	SDIS 1.2X6.5X150	**9008420000**
Identification systems		
	DEK 5/5 MC-10 NE WS	**1609801044**
	DEK 5/6 MC NE WS	**1609820000**
	DEK 5/8 MC NE WS	**1856740000**

Ordering data

		With lock pins	No lock pins
Type	**Qty.**	**Order No.**	**Order No.**
WGK 50/Z SW	10	**1250740000**	
WGK 50/Z GN/YE	10	**1937100000**	
WGK 50/Z	10	**1937110000**	
WGK 50 SW	10		**1250730000**
WGK 50 GN/YE	10		**1937040000**
WGK 50	10		**1937090000**

J

50 mm²

WGK 50 VP

Cable lug connection

Dimensioned drawing

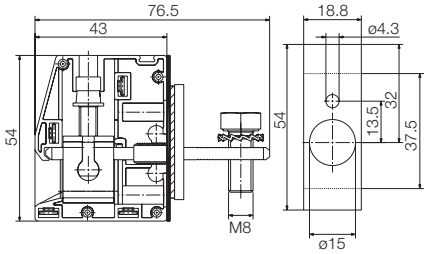

Variants

The WGK...VP, VWGK 4 and VWGK 6 variants of the WGK series, with an insulating housing and clamping yoke connection on the outside, are specially enhanced for use in potted and through-panel applications.
These products are developed for 100 % sealing in completely enclosed units..

WGK variants are used, for example, as device connections for EMC filters or fully insulated transformers.

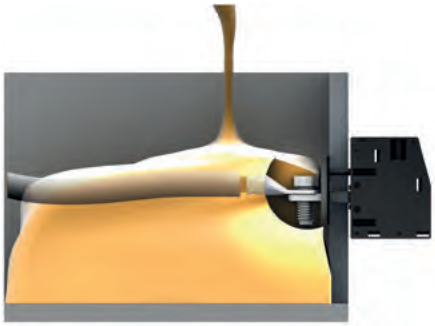

Ordering data

Type	Qty.	With lock pins Order No.	No lock pins Order No.
WGK 50 VP/Z SW	10	1250720000	
WGK 50 VP/Z GN/YE	10	1937070000	
WGK 50 VP/Z	10	1937080000	
WGK 50 VP SW	10		1250710000
WGK 50 VP GN/YE	10		1937050000
WGK 50 VP	10		1937060000

For the rated voltage of plastic and metal walls, see the "WGK" notes

Clamping yoke screw connection

The clamping yoke connection is a proven connection in use around the world today.
Steel clamping yokes made using a stamping and bending process guarantee a vibration proof clamp connection.
When the screw on the clamp is tightened, there is a counter effect in the clamping yoke's threaded area which prevents the connection accidentally loosening.
As the screw thread is on an inclined plane, the force is amplified and a very high clamping force is achieved.
Weidmüller uses hardened steel with optimised corrosion protection for stability and safety in addition to copper alloys in the contact area for good electrical conductivity.

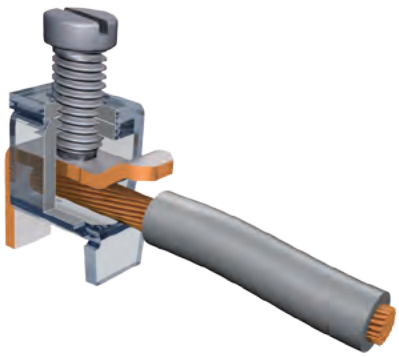

Through-Panel Terminals for devices
Series WGK - connects up to 95 mm²

Max. clamping range: 95 mm²

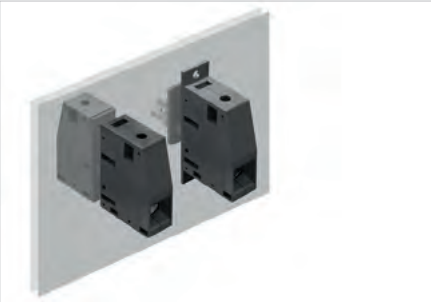

The high-current feed-through terminals of the WGK series provide a universal solution for feeding currents of different magnitude through the enclosure wall.

Various types of connection on the inside, such as cable lug connections which can be encapsulated (WGK ...VP) and maintenance-free clamping yoke screw connections (WGK...) provide the optimal connection for any installation situation.

Terminals with locking pins are available for simple and fast assembly of mutlti-pole blocks.

Product data

IEC: 1000 V / 232 A / 35 - 95 mm²
UL: 600 V / 230 A / AWG 4 - 4/0

72h

For additional articles and information, refer to catalog.weidmueller.com

Note:
- Clearance and creepage distances to other components must be devised in accordance with the relevant application standard. This can be achieved in the device by full encapsulation or by the use of additional spacer plates.
- Rated data refer only to the component itself. Clearance and creepage distances to other components are to be designed in accordance with the relevant application standards.
- Colours: SW = black; GN/YL = green yellow; none = grey
- Additional colours on request
- WGK: Rated voltage plastic walls: 1–6 mm = 1000 V; metal walls: < 1 mm = 1000 V; metal walls: 1–3.5 mm = 800 V; metal walls: 3.5–5.5 mm = 690 V

WGK 95

Screw connection

Dimensioned drawing

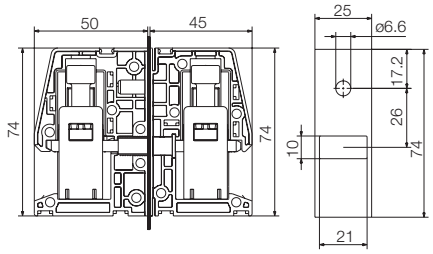

Technical data

In compliance with IEC 60664-1 / IEC 61984				
Clamping range, max.	mm²	35...95		
Solid core H05(07) V-U	**mm²**	**35...95**		
Stranded H07 V-R	mm²	35...95		
Flexible H05(07) V-K	mm²	35...95		
Flexible with ferrule	mm²	35...95		
Ferrule with plastic collar	mm²			
Stripping length	mm	27		
Screwdriver blade	mm			
According to norm				
Tightening torque range	Nm	15...20		
Rated current, max.	**A**	**232**		
At ambient temperature		20°C		40°C
For conductor cross-section	mm²		95	
Overvoltage category		III	III	II
Pollution severity		3	2	2
Rated voltage	**V**	**1000**		
Rated impulse voltage	kV	8		
UL / CUL (Use Group)		**B**	**C**	**D**
Rated voltage	**V**	**600**		
Rated current	**A**	**230**		
AWG conductor	**AWG**		**4-4/0**	
CSA (Use Group)		**B**	**C**	**D**
Rated voltage	V	600		
Rated current	A	230		
AWG conductor	AWG		4-4/0	
General data				
Type of insulation material			Wemid (PA)	
UL 94 flammability rating			V-0	
Contact base material			E-Cu	
Material of contact surface			tinned	
Pin dimensions = d	mm			
Solder eyelet Ø = D	mm			
Solder eyelet Ø tolerance	mm			

Accessories

Note: Refer to the Accessories chapter for additional accessories.

Distance plate		**Order No.**
	DP WGK 95	**1937020000**
	DP WGK 95 SW	**1250620000**
Identification systems		
	DEK 5/5 MC-10 NE WS	**1609801044**
	DEK 5/6 MC NE WS	**1609820000**
	DEK 5/8 MC NE WS	**1856740000**

Ordering data

			With lock pins	No lock pins
Type	**Qty.**	**Order No.**	**Order No.**	
WGK 95/Z SW	10	**1250690000**		
WGK 95/Z GN/YE	10	**1937390000**		
WGK 95/Z	10	**1937400000**		
WGK 95 SW	10		**1250680000**	
WGK 95 GN/YE	10		**1937370000**	
WGK 95	10		**1937380000**	

J

95 mm²

WGK 95 F VP

Cable lug connection

Dimensioned drawing

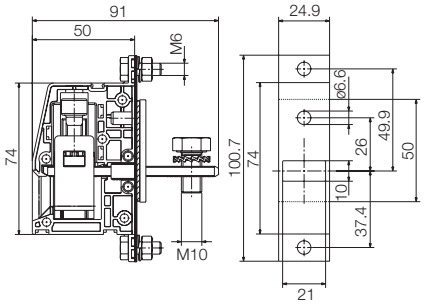

Variants

The WGK...VP, VWGK 4 and VWGK 6 variants of the WGK series, with an insulating housing and clamping yoke connection on the outside, are specially enhanced for use in potted and through-panel applications.
These products are developed for 100 % sealing in completely enclosed units..

WGK variants are used, for example, as device connections for EMC filters or fully insulated transformers.

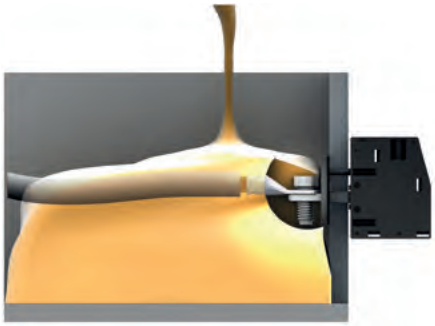

Ordering data

		With lock pins	No lock pins
Type	**Qty.**	**Order No.**	**Order No.**
WGK 95 F VP/Z SW	10	**1250670000**	
WGK 95 F VP/Z GN/YE	10	**1937360000**	
WGK 95 F VP/Z	10	**1937140000**	
WGK 95 F VP SW	10		**1250660000**
WGK 95 F VP GN/YE	10		**1937120000**
WGK 95 F VP	10		**1937130000**

For the rated voltage of plastic and metal walls, see the "WGK" notes

Clamping yoke screw connection

The clamping yoke connection is a proven connection in use around the world today.
Steel clamping yokes made using a stamping and bending process guarantee a vibration proof clamp connection.
When the screw on the clamp is tightened, there is a counter effect in the clamping yoke's threaded area which prevents the connection accidentally loosening.
As the screw thread is on an inclined plane, the force is amplified and a very high clamping force is achieved.
Weidmüller uses hardened steel with optimised corrosion protection for stability and safety in addition to copper alloys in the contact area for good electrical conductivity.